DATASHEET

QT301203640 Led panel QT 36W 300x1200 4000K RAL901

QT led panel 1195x295mm with narrow edges of only 19mm wide. Frame with white powder coating RAL9016. Equipped with 216 SMD4014 leds. Lacquered backplate with pre-assembled brackets for suspension mounting or fall protection. Supplied without driver. Always order one driver per panel separately. Lumen output up to 115lm/W. Suitable for 30W 750mA or 36W 900mA driver. Various mounting accessories available. ENEC certification

IP	IK		Warranty	lm/W	PF		Flicker-Free		CCT	DIM			ENEC	STOCK
IP40	IK07	120	5 YEARS	up to 115	-	50.000 L80B20	YES	82	4000	1-10V/DALI	SMD4014	>19	YES	YES

Technical specifications

Referentie	QT301203640
EAN code	5420076262815
ETIM code	EC002892

Electrical specifications

System power (W)	36
LED power (W)	36
Input voltage (Vac)	45VDC
Frequency (Hz)	CC
Driver included	no
Driver intern/extern	extern
Driver brand	-
Driver reference	-
Dimmable	1-10V DALI
Flicker free	yes
Power factor	-
THD	-
Driver output (V)	27~42V=
Driver output (mA)	900
Isolation class	III
Energy class	A+
N° circ. breaker 16A C	-
N° circ. breaker 16A D	-
Inrusch current	-

Warranty and certification

Lifetime (h)	50.000 L80B20	
Warranty (years)	5	(excluding batteries)
ENEC	yes	

Photometric specifications

Light angle (°)	120
Color temperature (K)	4000
CRI	82
UGR	>19
SDCM	3
Lumen output (Lm)	3975
Lm/W	115
Flux code	48 79 96 100 100
Ledchip	SMD4014
Led manufacturer	Hongli
N° of LEDs	216
Photobiological class	RG0

Dimensions and material properties

Dimensions (LxBxH)	1195x295x8mm
Weight (kg)	3
Color	white RAL9016
Working temp. (°C)	40°C
IP value	IP40
IK value	IK07
UV resistant	yes
Seawater resistant	no
UL94	-
N° in masterbox	5
N° on pallet	0
MOQ	1
Stock item	yes

Visit our website for all test reports LM-79 / LM-80 / TM-21 and elumdat files, subject to changes without notice.
Rechargeable batteries (lead or NiCd) that are part of a lighting device always have a one-year warranty!

Lumen distribution

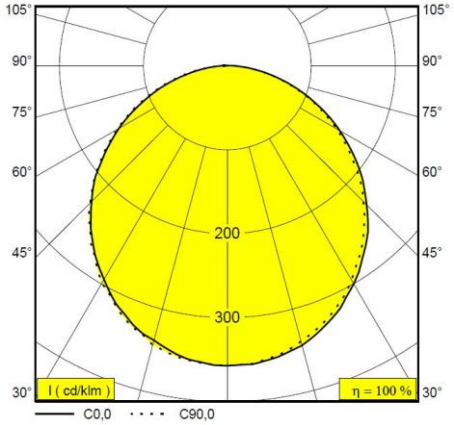

Distance curve:

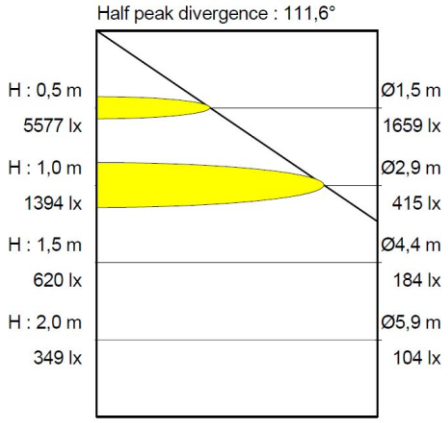

Spectrum distribution

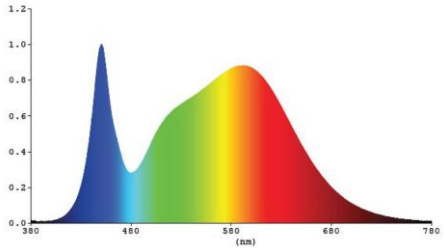

Lumendrop

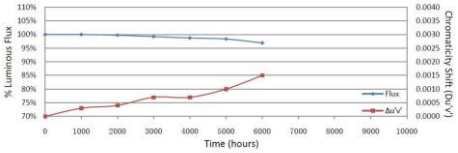

QT/QTU 216x SMD4014	
Tc 55°C	
L70B50	70000H
L80B20	50000H
L90B10	38000H

Accessories

QTD30W5	Driver QT 30W flicker-free not-dimmable 5y warrant	
QTD36W5	Driver QT 36W flicker-free not-dimmable 5y warrant	
UNIDRIVER36	Unidriver 36W TRIAC/1-10V/DALI/push amplitude dim	
UNIDRIVER50	Ledpanel unidriver 30~50W 1-10V/DALI/push dim	
QTRF30120W	Recessed frame for led panel 300x1200 RAL9016	
QTSF30120W	Surface frame for led panel 300x1200 RAL9016	
FLAIR30120B	Surface frame Ledpanel 30x120 black RAL9005	
FLAIR30120W	Surface frame Ledpanel 30x120 white RAL9010	
PL-FIX	Surface mounting set with 4 brackets	
PL-CLAMP	Mounting set with 4 clamping springs	
QTPEND	Suspension set 4 fixations for led panel QT	
PL-PEND2	Suspension kit 1m with 2 fixations	
PL-CONNECT	Connection box + 2,5m cable transparent	
PL-PROTECT	Fall protection 1m with self-closing hook	

Visit our website for all test reports LM-79 / LM-80 / TM-21 and elumdat files, subject to changes without notice.
Rechargeable batteries (lead or NiCd) that are part of a lighting device always have a one-year warranty!

Dimensions

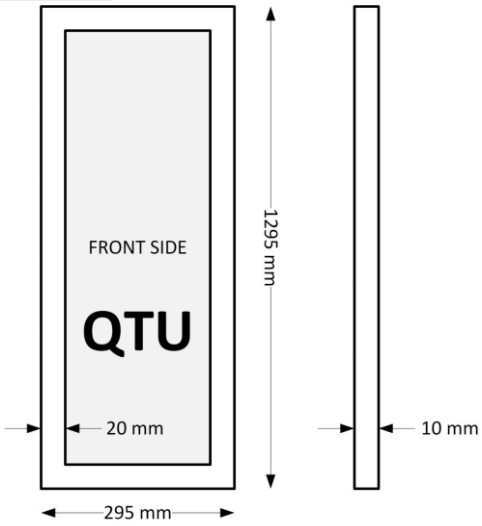

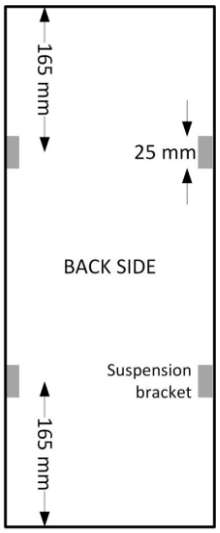

Connection diagram

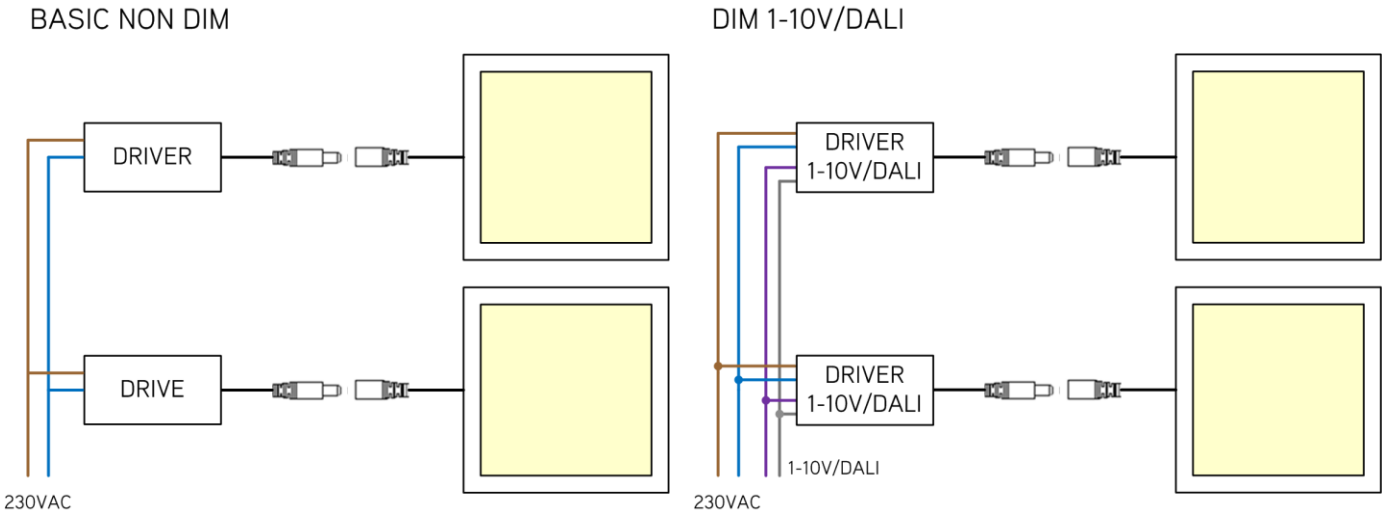

Visit our website for all test reports LM-79 / LM-80 / TM-21 and elumdat files, subject to changes without notice.
Rechargeable batteries (lead or NiCd) that are part of a lighting device always have a one-year warranty!