DATASHEET

BS1919

integratech
less energy, more light

Description:

Led profile Baseline 19x19 with cable base

IP20

2 YEARS

Led profile Baseline 19x19mm with separate cable base. Complete kit consists of 1x alu profile 2m, 1x cable base 2m, opal cover and 2x endcaps. Cable base to be attached with screws or glue. Packed in handy cardboard tube.

Technical specifications	
Reference	BS1919
EAN code	5420076234591
ETIM code	EC002707

Dimensions and material properties	
Dimensions (LxWxH)	2000x19x19mm
Outer diameter (mm)	
Cutout diameter (mm)	
Weight (kg)	0,95
Cooling capacity	15W/m
Color	alu
IP value	IP20
N° in masterbox	10
N° on pallet	0
MOQ	1

Warranty and certification	
Warranty (years)	2

Dimensions

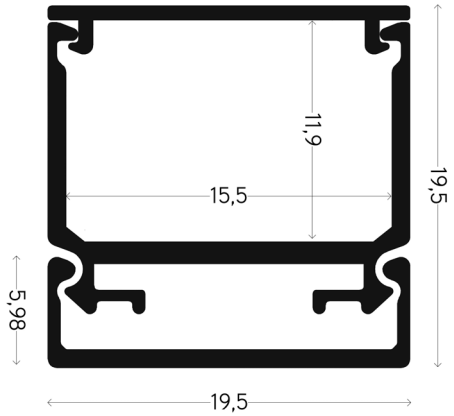

Visit our website for all test reports LM-79 / LM-80 / TM-21 and elumdat files, subject to changes without notice.