DATASHEET

BM3-1350425GR

integratech
less energy more light.

Description:

Brightmaster 3 1350W 4000K 25° grey

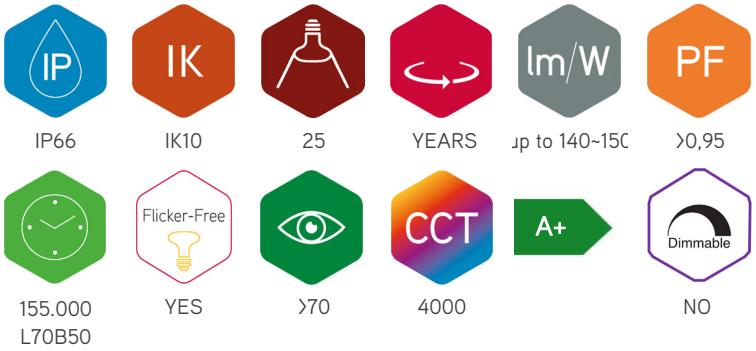

Power floodlight BM3 1350W 4000K with a small symmetrical beam of 25°. Extremely efficient luminaire with a very long lifespan, equipped with Meanwell drivers and Lumileds 3030/5050 LED chips, efficiency up to 150lm/W. Fully enclosed drive box with internal connection box. Built-in control unit, if one power supply fails, the other power supplies take over the power. LED indication with faulty power supply = no urgent interventions required. Built-in surge protection 10kV. Multi-functional mounting bracket suitable for all installation positions. Particularly suitable for high-end applications such as sports fields where a lot of light is needed with few luminaires. Options 1-10V/DALI dimmable, separate driverbox at the bottom of the pole, fall protection, laser tool for precision adjustment.

Technical specifications	
Referentie	BM3-1350425GR
EAN code	5420076262389
ETIM code	EC001744
Electrical specifications	
System power (W)	1316~1426
LED power (W)	1224~1326
Input voltage (Vac)	100~240
Frequency (Hz)	50/60
Driver included	yes
Driver intern/extern	intern
Dimmable	nee
Flicker free	yes
Power factor	>0,95
Connection cable	1,3m H05RN-F
Driver output (V)	114-228V
Driver output (mA)	525-1050mA
Isolation class	I
Energy class	A+
N° circ. breaker 16A C	1
N° circ. breaker 16A D	2
Inrusch current	450A 450µs

Warranty and certification	
Lifetime (h)	155.000 L70B50
Warranty (years)	(excluding batteries)
ENEC	yes

Photometric specifications	
Light angle (°)	25
Color temperature (K)	4000
CRI	>70
UGR	>30
SDCM	3
Lumen output (Lm)	206800
Lm/W	140~150
Flux code	90 95 99 100 100
Ledchip	LUMILEDS 5050
Led manufacturer	Lumileds
N° of LEDs	648
Photobiological class	RG1

Dimensions and material properties	
Dimensions (LxBxH)	700x240x890mm
Weight (kg)	44,3
Color	grey
Working temp. (°C)	-25~+55
IP value	IP66
IK value	IK10
UV resistant	yes
Seawater resistant	no
UL94	
N° in masterbox	1
N° on pallet	0
MOQ	1
Stock item	no

Visit our website for all test reports LM-79 / LM-80 / TM-21 and elumdat files, subject to changes without notice.
Rechargeable batteries (lead or NiCd) that are part of a lighting device always have a one-year warranty!

DATASHEET

BM3-1350425GR

Lumen distribution

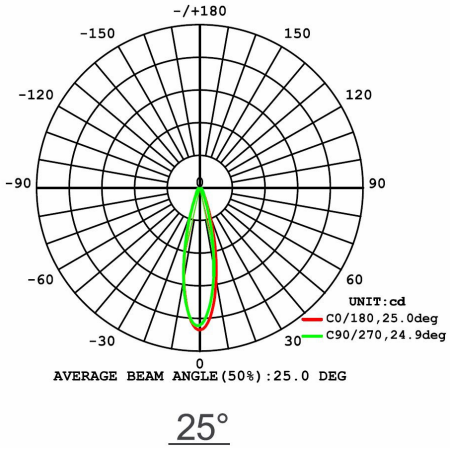

25°

Distance curve:

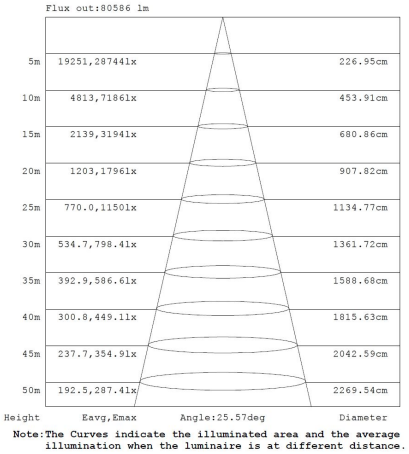

Spectrum distribution

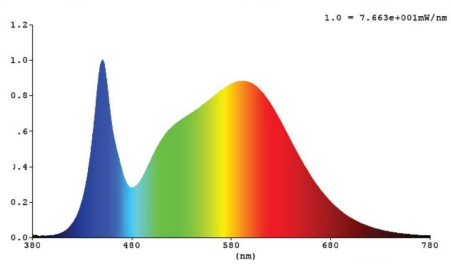

Lumendrop

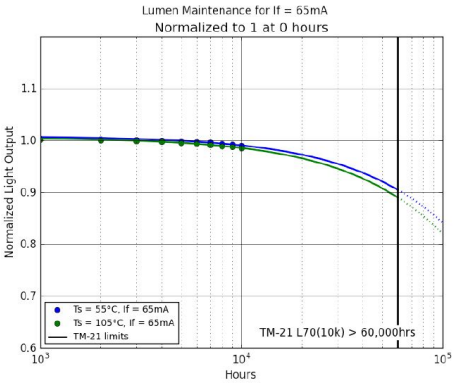

Visit our website for all test reports LM-79 / LM-80 / TM-21 and elumdat files, subject to changes without notice.
Rechargeable batteries (lead or NiCd) that are part of a lighting device always have a one-year warranty!

Dimensions

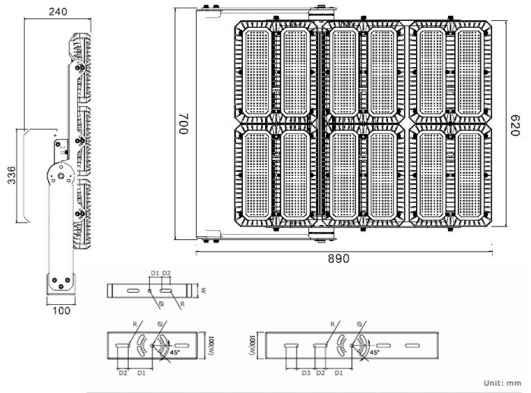

power	L1	L2	L3	L4	H	W	D1	D2	D3	R	ø
230W	340	373	310	250	185	55	50	35	/	6.25	12.5
450W	390	685	310	512	240	100	90	40	/	6.25	12.5
650W	390	890	310	775	240	100	90	40	/	6.25	12.5
900W	700	685	620	512	240	100	100	40	70	6.25	12.5
1350W	700	890	620	775	240	100	100	40	70	6.25	12.5

Connection diagram

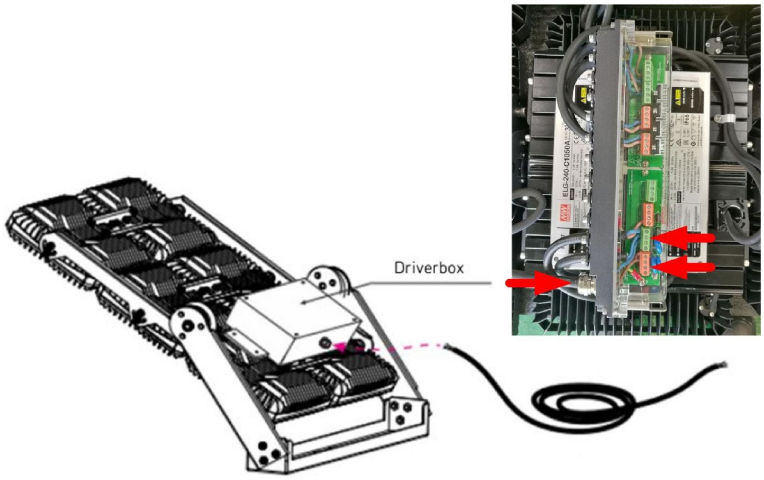

Visit our website for all test reports LM-79 / LM-80 / TM-21 and elumdat files, subject to changes without notice.
Rechargeable batteries (lead or NiCd) that are part of a lighting device always have a one-year warranty!